US009181793B2

(12) **United States Patent**
**Baxter et al.**

(10) **Patent No.: US 9,181,793 B2**
(45) **Date of Patent: Nov. 10, 2015**

(54) **RADIO FREQUENCY IDENTIFICATION SYSTEM FOR MINERAL EXTRACTION EQUIPMENT**

(75) Inventors: **Daniel B. Baxter**, Tomball, TX (US); **John D. Scalzo**, Baton Rouge, LA (US); **Jonatan Ram**, Metairie, LA (US); **Adam Sitar**, Prairieville, LA (US); **Ritabrata Das**, Baton Rouge, LA (US)

(73) Assignee: **Cameron International Corporation**, Houston, TX (US)

( * ) Notice: Subject to any disclaimer, the term of this patent is extended or adjusted under 35 U.S.C. 154(b) by 249 days.

(21) Appl. No.: **13/410,661**

(22) Filed: **Mar. 2, 2012**

(65) **Prior Publication Data**

US 2012/0223813 A1 Sep. 6, 2012

**Related U.S. Application Data**

(60) Provisional application No. 61/448,641, filed on Mar. 2, 2011.

(51) **Int. Cl.**

| | |
|---|---|
| ***G06K 7/01*** | (2006.01) |
| ***E21B 44/00*** | (2006.01) |
| ***G06Q 50/02*** | (2012.01) |
| ***G01V 15/00*** | (2006.01) |
| ***G06Q 10/08*** | (2012.01) |

(52) **U.S. Cl.**

CPC ..... ***E21B 44/00*** (2013.01); ***G01V 15/00*** (2013.01); ***G06Q 10/0833*** (2013.01); ***G06Q 50/02*** (2013.01)

(58) **Field of Classification Search**

CPC ..... E21B 12/00; E21B 17/00; E21B 33/00; E21B 44/00; E21B 47/122; E21B 2041/00; G01S 13/00; G01V 15/00; G06K 7/01; G06Q 10/08; G06Q 10/0833; G06Q 10/087; G06Q 10/10; G06Q 50/02

USPC ..... 166/64; 175/40; 235/175; 340/5.8, 10.1, 340/10.41, 539.13, 539.32, 572.1, 854.1, 340/854.2, 854.6; 709/217

See application file for complete search history.

(56) **References Cited**

U.S. PATENT DOCUMENTS

| | | | | |
|---|---|---|---|---|
| 7,707,076 | B1 * | 4/2010 | Whiteley et al. | 705/28 |
| 8,315,789 | B2 * | 11/2012 | Dunbabin et al. | 701/301 |
| 8,710,714 | B2 * | 4/2014 | Loi et al. | 310/313 R |
| 2006/0001543 | A1 * | 1/2006 | Raskar et al. | 340/572.1 |
| 2006/0290519 | A1 * | 12/2006 | Boate et al. | 340/573.4 |
| 2007/0236338 | A1 * | 10/2007 | Maruyama | 340/10.41 |
| 2009/0055293 | A1 * | 2/2009 | Mueller | 705/28 |
| 2009/0097846 | A1 * | 4/2009 | Kozischek et al. | 398/20 |
| 2009/0115609 | A1 * | 5/2009 | Weaver | 340/572.1 |

(Continued)

FOREIGN PATENT DOCUMENTS

| | | | |
|---|---|---|---|
| WO | 2011017278 | A1 | 2/2011 |

OTHER PUBLICATIONS

PCT International Search Report and Written Opinion for PCT/US2012/027427, dated Sep. 14, 2012.

*Primary Examiner* — Benjamin C Lee
*Assistant Examiner* — Stephen Burgdorf
(74) *Attorney, Agent, or Firm* — Chamberlain Hrdlicka

(57) **ABSTRACT**

A system including, a first component of a mineral extraction system, and a first radio frequency identification (RFID) module coupled to the first component, wherein the first RFID module comprises first component data relating to the first component, and first location data relating to a first location of the first component.

**15 Claims, 9 Drawing Sheets**

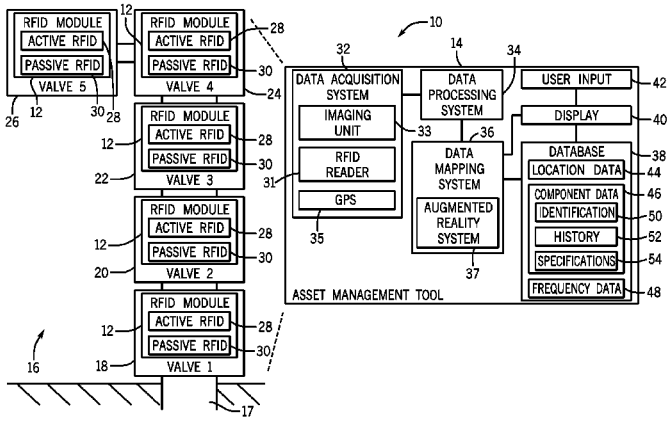

(56) **References Cited**

U.S. PATENT DOCUMENTS

| | | | | |
|---|---|---|---|---|
| 2009/0121895 | A1* | 5/2009 | Denny et al. | 340/854.1 |
| 2009/0315678 | A1* | 12/2009 | Padmanabhan et al. | 340/10.1 |
| 2009/0327102 | A1 | 12/2009 | Maniar et al. | |
| 2010/0097221 | A1* | 4/2010 | Kreiner et al. | 340/572.1 |
| 2010/0231407 | A1 | 9/2010 | Carr | |
| 2010/0245075 | A1* | 9/2010 | Stevens et al. | 340/539.1 |
| 2010/0326655 | A1 | 12/2010 | Redlinger et al. | |
| 2011/0309931 | A1* | 12/2011 | Rose | 340/539.13 |
| 2012/0068813 | A1* | 3/2012 | Karttaavi et al. | 340/5.2 |
| 2012/0075072 | A1* | 3/2012 | Pappu | 340/10.1 |
| 2012/0092130 | A1* | 4/2012 | Chung et al. | 340/10.1 |
| 2012/0092134 | A1* | 4/2012 | Stern et al. | 340/10.1 |
| 2012/0237083 | A1* | 9/2012 | Lange et al. | 382/103 |

* cited by examiner

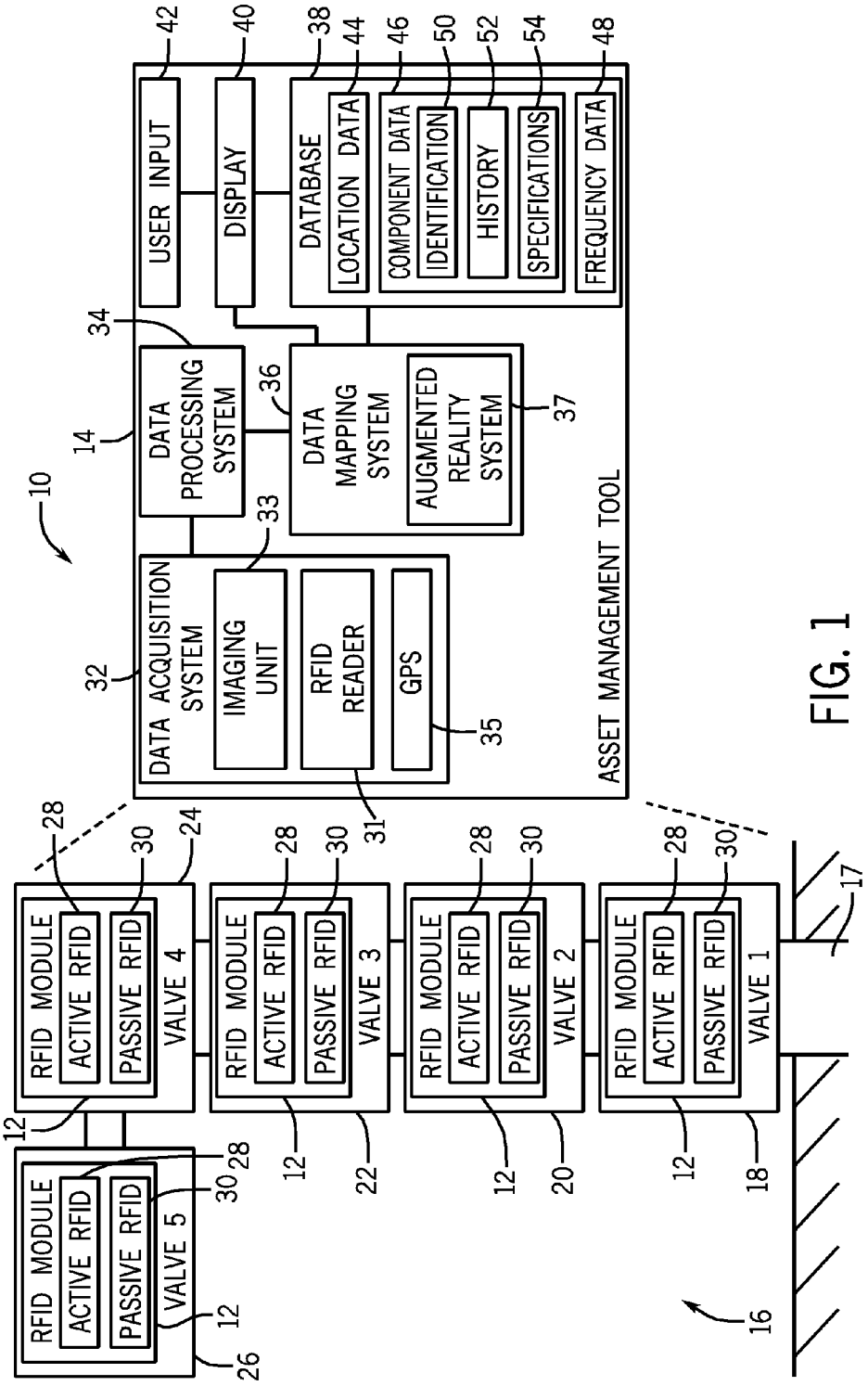
ASSET MANAGEMENT TOOL
USER INPUT
DISPLAY
DATABASE
LOCATION DATA
COMPONENT DATA
IDENTIFICATION
HISTORY
SPECIFICATIONS
FREQUENCY DATA
DATA PROCESSING SYSTEM
DATA MAPPING SYSTEM
AUGMENTED REALITY SYSTEM
DATA ACQUISITION SYSTEM
IMAGING UNIT
RFID READER
GPS
RFID MODULE
ACTIVE RFID
PASSIVE RFID
VALVE 1
VALVE 2
VALVE 3
VALVE 4
VALVE 5
10
12
14
16
17
18
20
22
24
26
28
30
31
32
33
34
35
36
37
38
40
42
44
46
48
50
52
54

FIG. 1

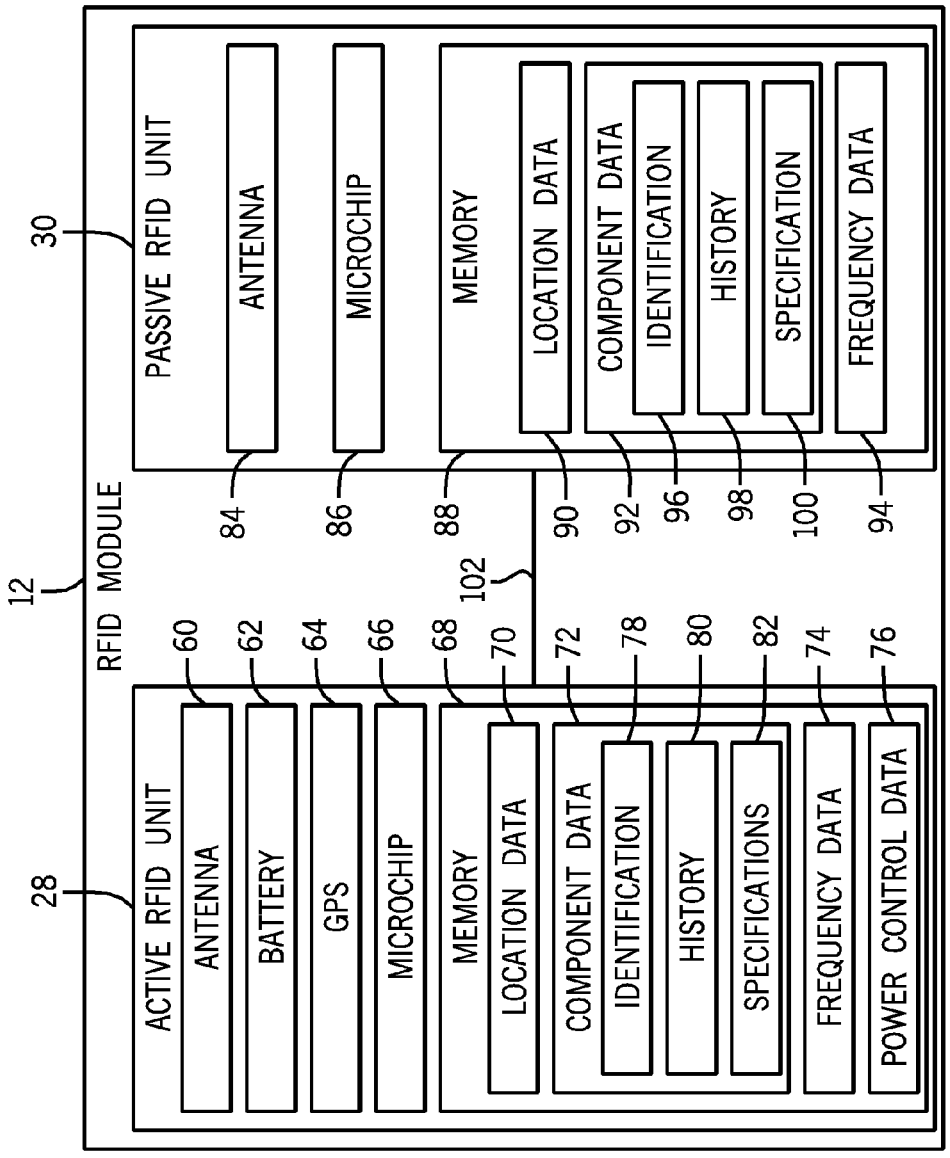
RFID MODULE
12
PASSIVE RFID UNIT
30
ANTENNA
MICROCHIP
MEMORY
LOCATION DATA
COMPONENT DATA
IDENTIFICATION
HISTORY
SPECIFICATION
FREQUENCY DATA
84
86
88
90
92
96
98
100
94
102
ACTIVE RFID UNIT
28
ANTENNA
BATTERY
GPS
MICROCHIP
MEMORY
LOCATION DATA
COMPONENT DATA
IDENTIFICATION
HISTORY
SPECIFICATIONS
FREQUENCY DATA
POWER CONTROL DATA
60
62
64
66
68
70
72
78
80
82
74
76

FIG. 2

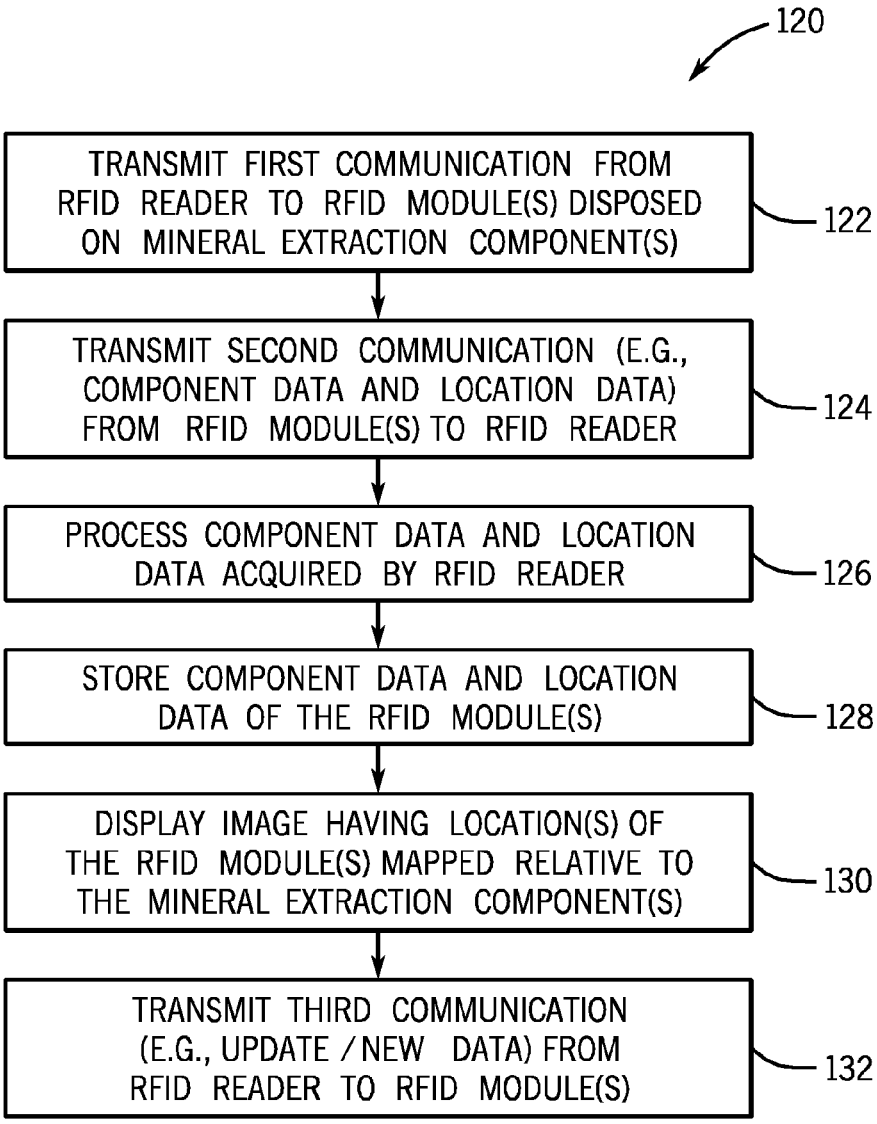
120
TRANSMIT FIRST COMMUNICATION FROM RFID READER TO RFID MODULE(S) DISPOSED ON MINERAL EXTRACTION COMPONENT(S)
122
TRANSMIT SECOND COMMUNICATION (E.G., COMPONENT DATA AND LOCATION DATA) FROM RFID MODULE(S) TO RFID READER
124
PROCESS COMPONENT DATA AND LOCATION DATA ACQUIRED BY RFID READER
126
STORE COMPONENT DATA AND LOCATION DATA OF THE RFID MODULE(S)
128
DISPLAY IMAGE HAVING LOCATION(S) OF THE RFID MODULE(S) MAPPED RELATIVE TO THE MINERAL EXTRACTION COMPONENT(S)
130
TRANSMIT THIRD COMMUNICATION (E.G., UPDATE / NEW DATA) FROM RFID READER TO RFID MODULE(S)
132

FIG. 3

FIG. 4

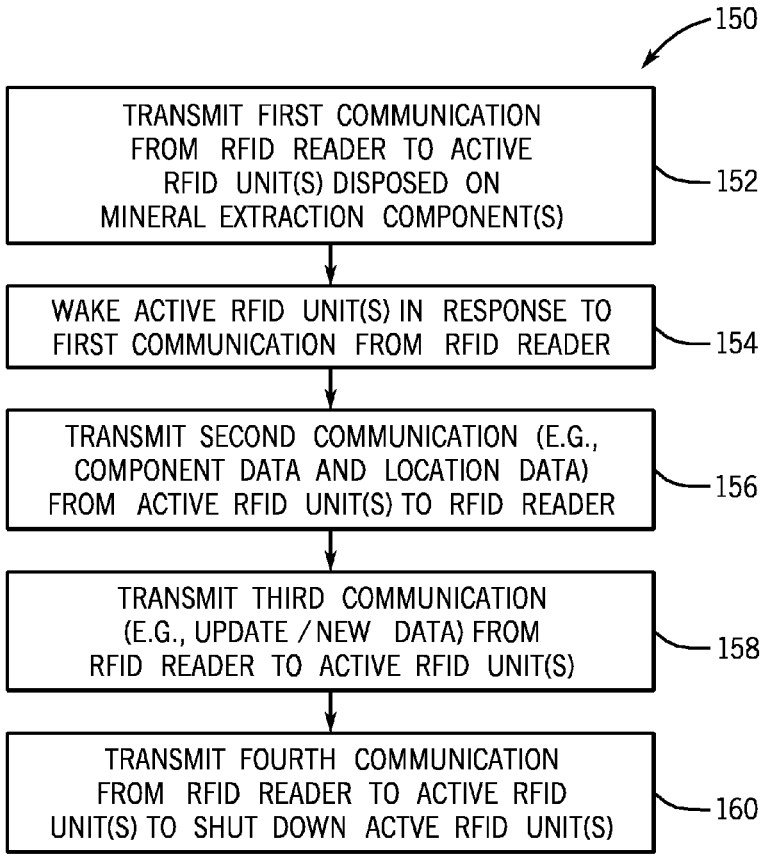
150
TRANSMIT FIRST COMMUNICATION FROM RFID READER TO ACTIVE RFID UNIT(S) DISPOSED ON MINERAL EXTRACTION COMPONENT(S)
152
WAKE ACTIVE RFID UNIT(S) IN RESPONSE TO FIRST COMMUNICATION FROM RFID READER
154
TRANSMIT SECOND COMMUNICATION (E.G., COMPONENT DATA AND LOCATION DATA) FROM ACTIVE RFID UNIT(S) TO RFID READER
156
TRANSMIT THIRD COMMUNICATION (E.G., UPDATE / NEW DATA) FROM RFID READER TO ACTIVE RFID UNIT(S)
158
TRANSMIT FOURTH COMMUNICATION FROM RFID READER TO ACTIVE RFID UNIT(S) TO SHUT DOWN ACTVE RFID UNIT(S)
160

FIG. 5

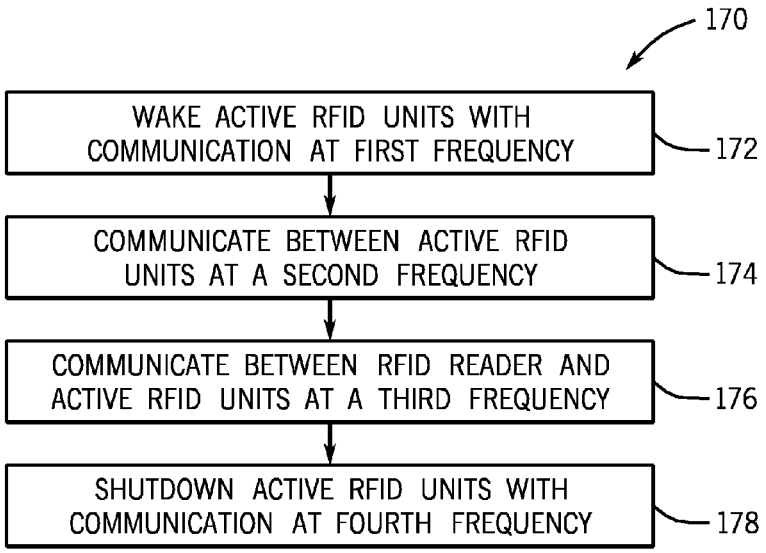
170
WAKE ACTIVE RFID UNITS WITH COMMUNICATION AT FIRST FREQUENCY
172
COMMUNICATE BETWEEN ACTIVE RFID UNITS AT A SECOND FREQUENCY
174
COMMUNICATE BETWEEN RFID READER AND ACTIVE RFID UNITS AT A THIRD FREQUENCY
176
SHUTDOWN ACTIVE RFID UNITS WITH COMMUNICATION AT FOURTH FREQUENCY
178

FIG. 6

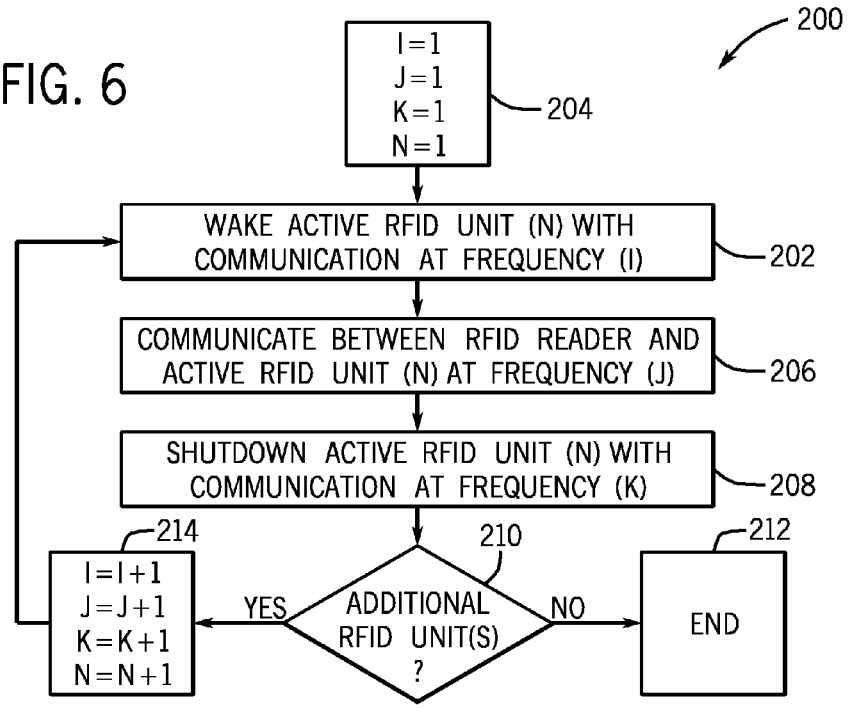
200
I=1
J=1
K=1
N=1
204
WAKE ACTIVE RFID UNIT (N) WITH COMMUNICATION AT FREQUENCY (I)
202
COMMUNICATE BETWEEN RFID READER AND ACTIVE RFID UNIT (N) AT FREQUENCY (J)
206
SHUTDOWN ACTIVE RFID UNIT (N) WITH COMMUNICATION AT FREQUENCY (K)
208
214
I=I+1
J=J+1
K=K+1
N=N+1
210
ADDITIONAL RFID UNIT(S) ?
YES
NO
212
END

FIG. 7

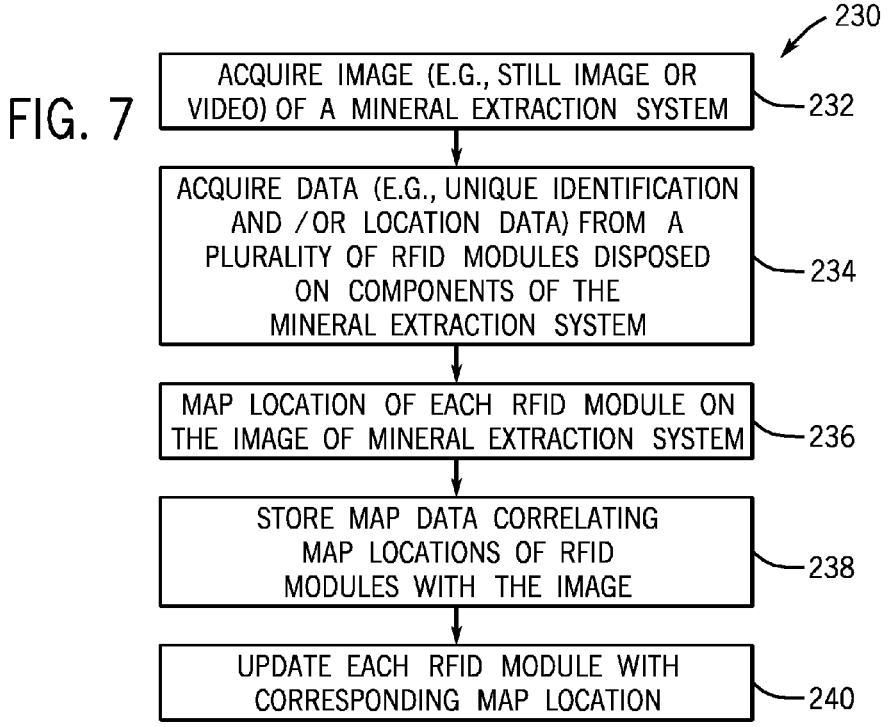
230
ACQUIRE IMAGE (E.G., STILL IMAGE OR VIDEO) OF A MINERAL EXTRACTION SYSTEM
232
ACQUIRE DATA (E.G., UNIQUE IDENTIFICATION AND /OR LOCATION DATA) FROM A PLURALITY OF RFID MODULES DISPOSED ON COMPONENTS OF THE MINERAL EXTRACTION SYSTEM
234
MAP LOCATION OF EACH RFID MODULE ON THE IMAGE OF MINERAL EXTRACTION SYSTEM
236
STORE MAP DATA CORRELATING MAP LOCATIONS OF RFID MODULES WITH THE IMAGE
238
UPDATE EACH RFID MODULE WITH CORRESPONDING MAP LOCATION
240

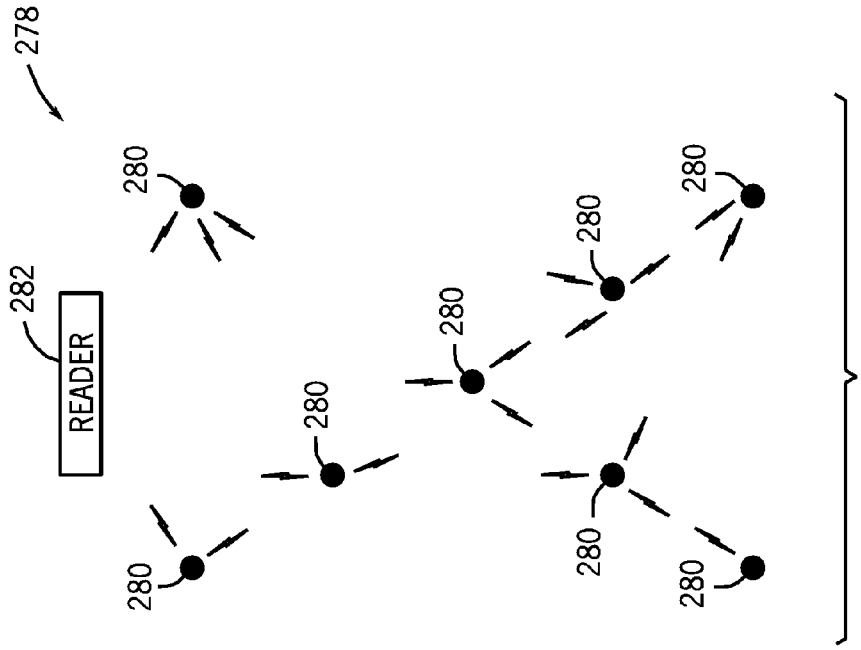
278
282
READER
280
280
280
280
280
280
280
280

FIG. 9

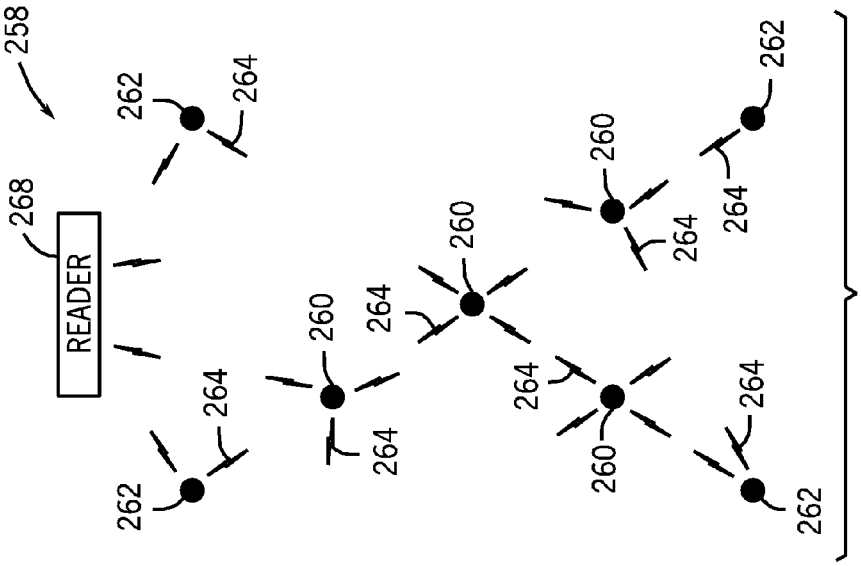
258
268
READER
262
264
260
262
264
260
264
260
264
260
264
262
264
262
264
260
264
262

FIG. 8

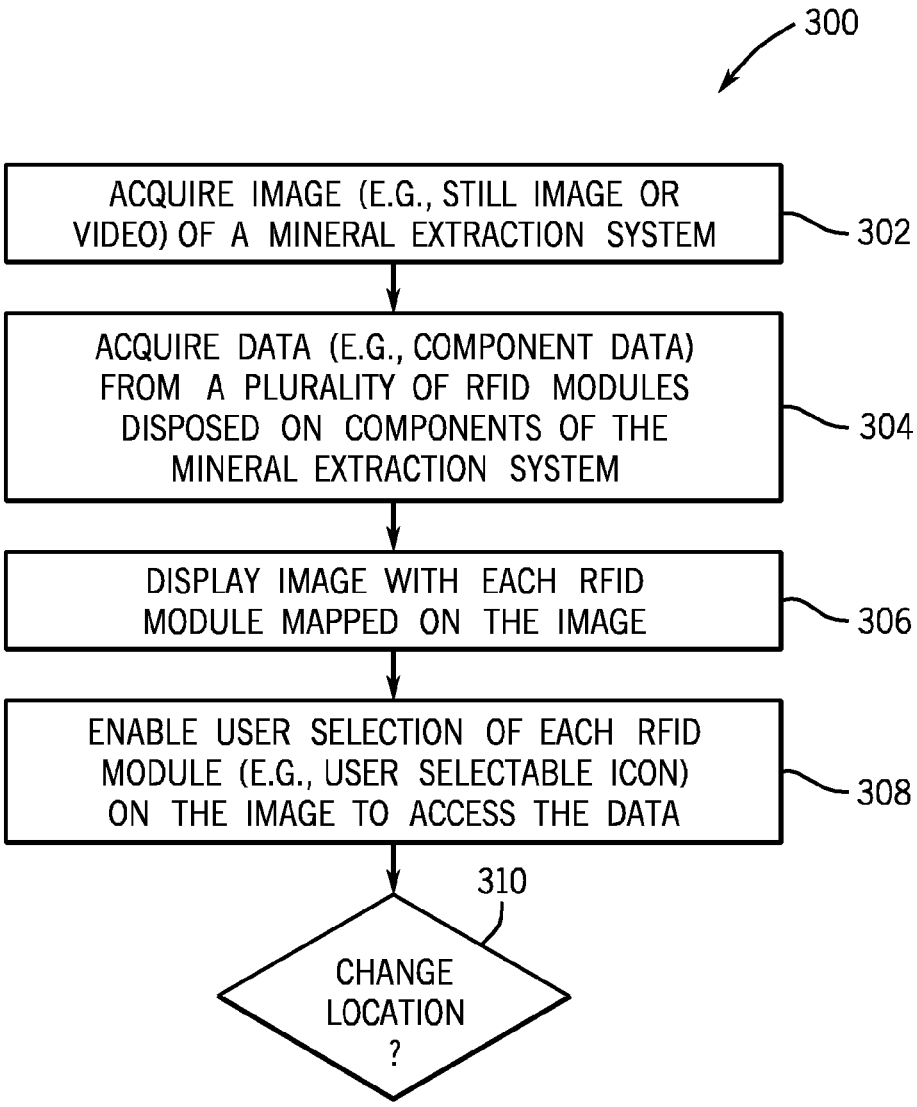
300
ACQUIRE IMAGE (E.G., STILL IMAGE OR VIDEO) OF A MINERAL EXTRACTION SYSTEM
302
ACQUIRE DATA (E.G., COMPONENT DATA) FROM A PLURALITY OF RFID MODULES DISPOSED ON COMPONENTS OF THE MINERAL EXTRACTION SYSTEM
304
DISPLAY IMAGE WITH EACH RFID MODULE MAPPED ON THE IMAGE
306
ENABLE USER SELECTION OF EACH RFID MODULE (E.G., USER SELECTABLE ICON) ON THE IMAGE TO ACCESS THE DATA
308
310
CHANGE LOCATION ?

FIG. 10

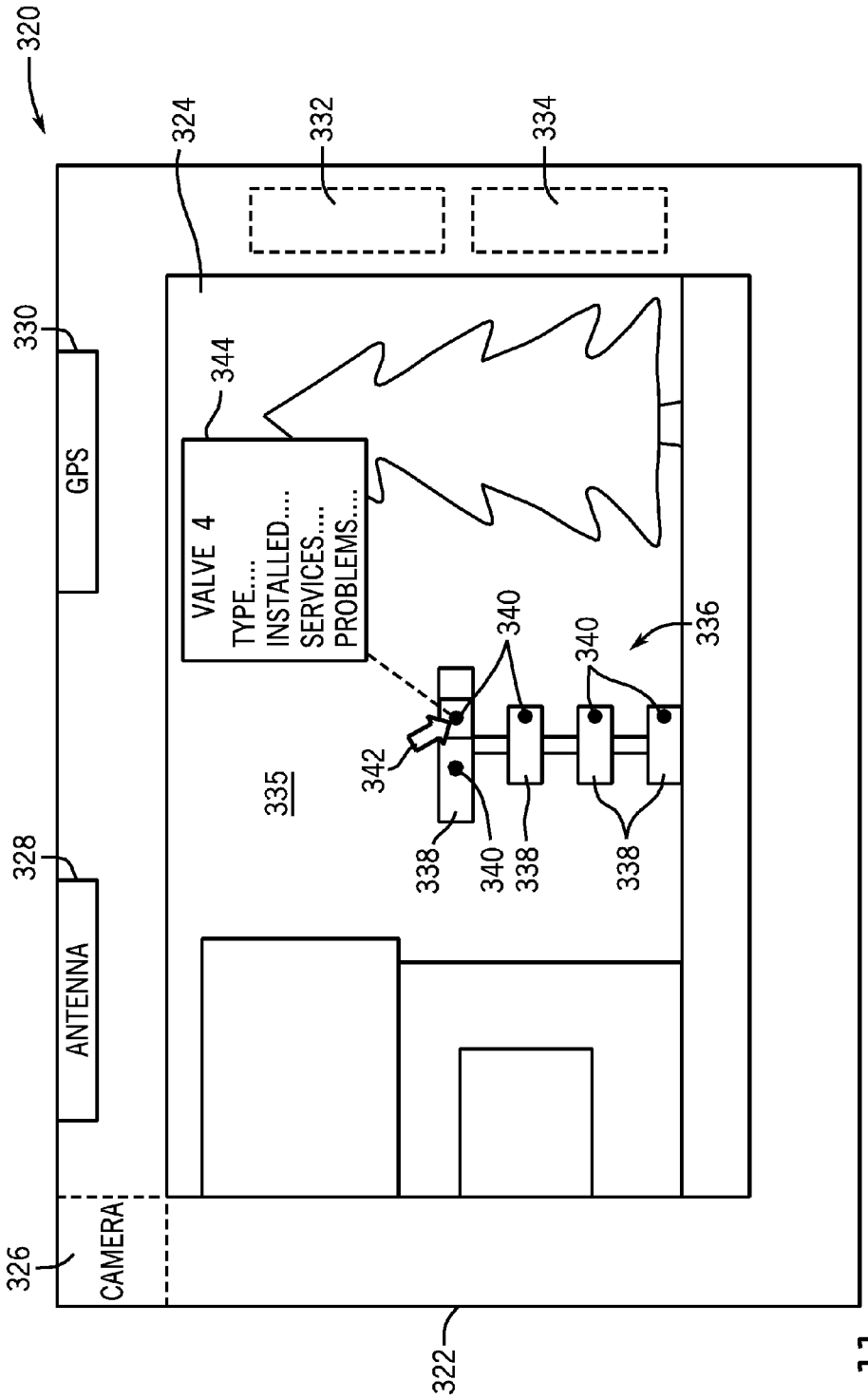
320
324
332
334
330
GPS
344
VALVE 4
TYPE....
INSTALLED....
SERVICES....
PROBLEMS....
340
340
336
342
335
338
340
338
338
328
ANTENNA
326
CAMERA
322

FIG. 11

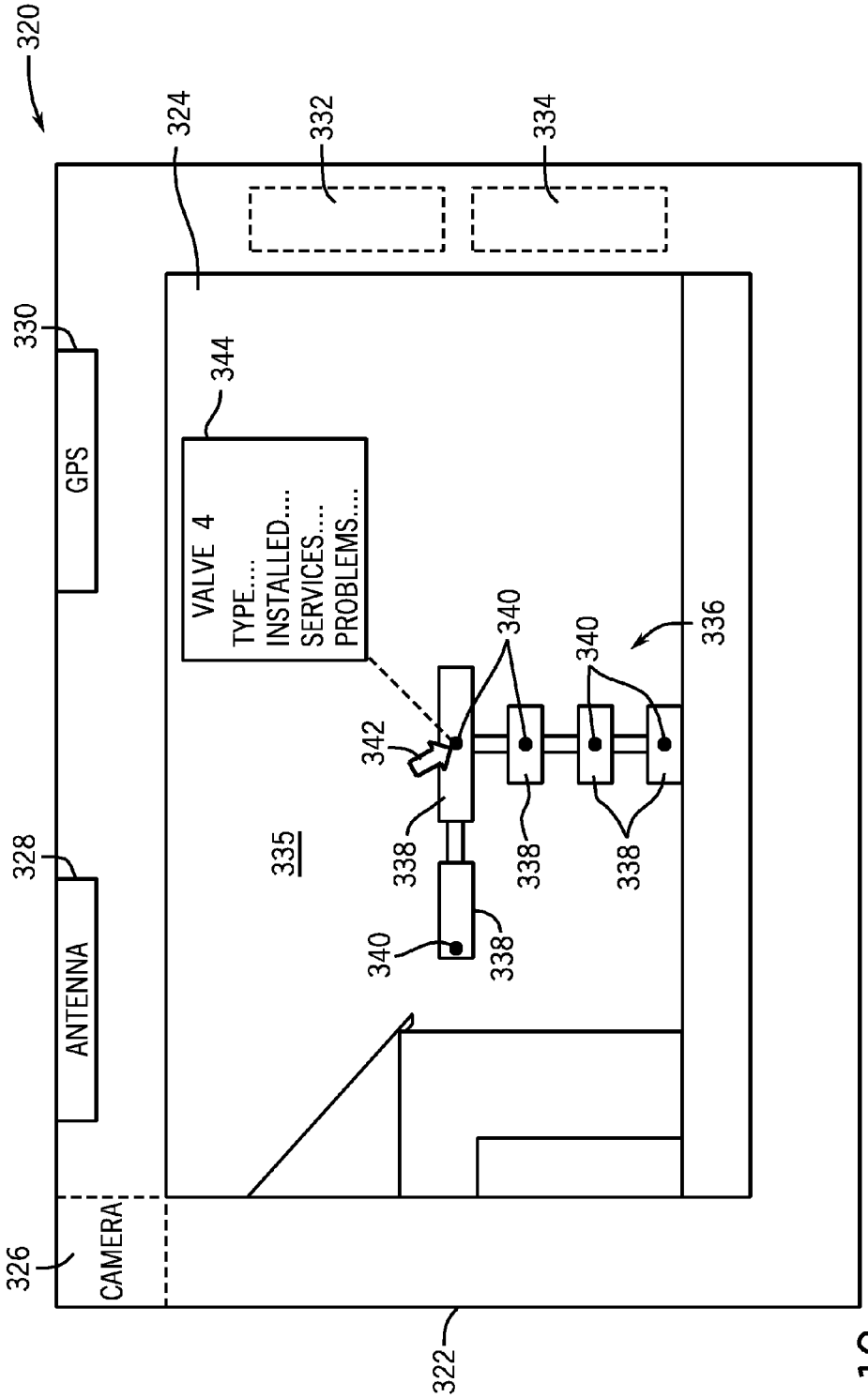
320
324
332
334
330
GPS
344
VALVE 4
TYPE....
INSTALLED....
SERVICES....
PROBLEMS....
340
340
336
342
335
338
338
338
328
ANTENNA
340
338
326
CAMERA
322

FIG. 12

# RADIO FREQUENCY IDENTIFICATION SYSTEM FOR MINERAL EXTRACTION EQUIPMENT

## BACKGROUND

This section is intended to introduce the reader to various aspects of art that may be related to various aspects of the present invention, which are described and/or claimed below. This discussion is believed to be helpful in providing the reader with background information to facilitate a better understanding of the various aspects of the present invention. Accordingly, it should be understood that these statements are to be read in this light, and not as admissions of prior art.

In order to meet the demand for resources such as oil, natural gas, and other subterranean resources companies often invest significant amounts of time and money in searching for and extracting them from the earth. Particularly, once a desired resource is discovered below the surface of the earth, drilling and production systems are often employed to access and extract the resource. Such systems generally include a wellhead assembly through which the resource is extracted and a Christmas tree that controls the flow of fluids into and out of the wellhead. When assembled, the tree may couple to the wellhead and include a variety of valves, fittings, and controls for operating the well. Unfortunately, existing systems are not effective in managing the various pieces of equipment and assisting operators in determining their location.

## DESCRIPTION OF THE DRAWINGS

Various features, aspects, and advantages of the present invention will become better understood when the following detailed description is read with reference to the accompanying figures in which like characters represent like parts throughout the figures, wherein:

FIG. **1** is a block diagram of an embodiment of an asset management system with radio frequency identification (RFID) modules and an asset management tool;

FIG. **2** is a block diagram of an embodiment of a radio frequency identification (RFID) module;

FIG. **3** is a flow chart of an embodiment of a process for managing assets;

FIG. **4** is a flow chart of an embodiment of a process for communicating with active RFID module(s);

FIG. **5** is a flow chart of an embodiment of a process for communicating with active RFID modules at different frequencies;

FIG. **6** is a flow chart of an embodiment of a process for communicating with each RFID module individually;

FIG. **7** is a flow chart of an embodiment of a process for mapping the location of an RFID module onto an image;

FIG. **8** is a block diagram of an embodiment of RFID modules wherein blind modules are communicating with reference modules to determine their location;

FIG. **9** is a block diagram of an embodiment of RFID modules wherein all the modules are reference modules;

FIG. **10** is a flow chart of an embodiment of a process using augmented reality to manage assets;

FIG. **11** is a block diagram of an embodiment illustrating an asset management tool utilizing augmented reality; and

FIG. **12** is a block diagram of an embodiment illustrating an asset management tool utilizing augmented reality.

## DESCRIPTION OF SPECIFIC EMBODIMENTS

One or more specific embodiments of the present invention will be described below. These described embodiments are only exemplary of the present invention. Additionally, in an effort to provide a concise description of these exemplary embodiments, all features of an actual implementation may not be described in the specification. It should be appreciated that in the development of any such actual implementation, as in any engineering or design project, numerous implementation-specific decisions must be made to achieve the developers' specific goals, such as compliance with system-related and business-related constraints, which may vary from one implementation to another. Moreover, it should be appreciated that such a development effort might be complex and time consuming, but would nevertheless be a routine undertaking of design, fabrication, and manufacture for those of ordinary skill having the benefit of this disclosure.

The embodiments disclosed below include a radio frequency identification (RFID) system for asset management of various flow control equipment, mineral extraction equipment, underwater (e.g., subsea) equipment, oil and gas equipment, or any combination thereof. Although the disclosed embodiments may be used with a variety of equipment, including the equipment noted above, the following discussion presents the RFID system in context of mineral extraction equipment. Nevertheless, the disclosed embodiments are intended to be used with other equipment, such as the equipment listed above. The RFID system includes an asset management tool that interacts with various RFID modules, which may include both active and passive RFID modules integrated together in a common package, distributed on various equipment. For example, each component of mineral extraction equipment may include one or more RFID modules. The RFID modules enable the asset management tool to identify and determine information about the equipment through radio wave communications. The RFID modules may also include a memory for storing information received from and for information to be transmitted to the asset management tool.

The RFID modules may include an active RFID module and a passive RFID module. The passive RFID modules may enable close range communications relating to individual RFID modules (and corresponding equipment), while the active RFID modules may enable communications at a greater distance with one or more of the RFID modules at the same time. In other words, the RFID system may simultaneously transmit and/or receive transmissions with a plurality of active RFID modules, thereby managing an entire asset at a distance. The RFID modules may use different radio frequencies for communication with the asset management tool as well as with each other. For example, the RFID modules may communicate location information amongst each other at one frequency and communicate with the asset management tool at another frequency. By further example, the RFID modules and/or the asset management tool may communicate at a first frequency relating to a power control function (e.g., a wakeup function and/or a sleep function), a second frequency for communicating between the RFID modules and the tool, a third frequency for communicating directly between RFID modules, and/or additional frequencies for other functions.

The active RFID modules enable the asset management tool to identify the locations of particular pieces of mineral extraction equipment on an image of a mineral extraction system. For example, a still image may be acquired of the mineral extraction equipment, and each component of the equipment in the image may be correlated to a particular RFID module. This is possible, at least in part, due to the ability of the active RFID modules to communicate information over significant distances. This enables an operator to

perform a variety of functions including, but not limited to, acquiring inventory of mineral extraction equipment, identifying equipment needing maintenance, identifying equipment needing visual inspection, receiving data regarding particular pieces of equipment, and various other functions, all while at a standoff distance. In contrast, the passive RFID modules may ensure that an operator visually inspects or performs maintenance on a mineral extraction component, due to the short transmission distances of passive RFID.

Furthermore, the embodiments below describe an RFID system that includes an augmented reality system. The augmented reality system is configured to overlay information onto a real-time image of the mineral extraction system. For example, the augmented reality system may overlay symbols, icons, text, menus, or various operator selectable points or regions onto the real-time image of the real world object (e.g., the mineral extraction system). Thus, an operator can simultaneously view the real-time image of the mineral extraction system, while also obtaining information about the mineral extraction system from the overlaid information. In particular, an operator selectable feature may be overlaid onto each component (corresponding to the RFID tag for that component) of the mineral extraction system in the real-time image, such that the operator can quickly obtain information about each component. In this manner, the augmented reality system enables an operator to continuously view the location of RFID modules as the operator changes position around a mineral extraction system. For example, the augmented reality may include an imaging system, such as a camera, to acquire video or still images as the operator moves around the mineral extraction system. In certain embodiments, the imaging system may be integrated into a portable device, such as a laptop computer, a tablet computer, a smart phone, a personal digital assistant, or another processor-based device having a camera, a display, a processor, and memory.

FIG. **1** is a block diagram of an embodiment of an asset management system **10** with radio frequency identification (RFID) modules **12** and an asset management tool **14**. As illustrated, the RFID modules **12** are distributed on a Christmas tree **16** of a mineral extraction system. The Christmas tree **16** attaches to a wellhead **17** in order to extract subsurface minerals. In particular, the Christmas tree **16** includes various flow control components **18**, **20**, **22**, **24**, and **26** (e.g., valves, chokes, fittings, and controls) configured to assist in the extraction of the subsurface minerals. The valves, chokes, fittings, and controls may periodically need servicing, replacement, periodic checkups, and any number of other services during the operational life of the well. Furthermore, the valves, chokes, fittings, and controls may need asset management before and/or after deployment at a particular wellhead **17**. The asset management system **10** may therefore assist in tracking the location of valves, fittings, and controls on the Christmas tree **16**. The Christmas tree may be either a surface tree or a tree located subsea for a subsea well.

As illustrated in FIG. **1**, each of the flow control components (e.g., valves) **18-26** includes a respective RFID module **12**. In other embodiments, the RFID modules **12** may be attached to other pieces of equipment (e.g., pumps, fittings, controls, and other pieces of equipment). Each of these RFID modules **12** may include both an active RFID unit **28** and a passive RFID unit **30**. The active and passive RFID units **28** and **30** may transmit data to the asset management tool **14** for use by the asset management system **10**. The data may include items such as location data, power control data, and component data, among others. For example, the data may include historical operational data, historical servicing/maintenance data, model/serial number data, and so forth. By further example, the location data may include absolute locations of the RFID modules **12** relative to a reference point, relative locations among the RFID modules **12**, geographical locations of the RFID modules **12**, or any combination thereof.

The asset management tool **14** may include a data acquisition system **32**, a data processing system **34**, a data mapping system **36**, a database **38**, a display **40**, and a user input **42**. The data acquisition unit **32** may further include an RFID reader **31**, an imaging unit **33**, and a global positioning system (GPS) **35**. The RFID reader **31** receives and transmits radio frequency signals to/from the RFID modules **12**, thus enabling communication with the RFID modules **12**. The imaging unit **33** images the equipment having the RFID modules **12** with still images and/or video images. For example, the imaging unit **33** may be a still camera or video camera that takes pictures of the Christmas tree **16** with the RFID modules **12**. The GPS **35** is configured to obtain a geographical location of the asset management tool **14**, such that the geographical location may be used in combination with relative locations of the RFID modules **12** within the Christmas tree **16**. In some embodiments, as discussed in detail below, each RFID module **12** also may include a GPS, such that the geographical location may be obtained for each individual module **12**. In some embodiments, the RFID reader **31**, imaging unit **33**, and GPS **35** may be combined into a single device or may be physically separate pieces of equipment.

As the RFID reader **31**, imaging unit **33**, and GPS **35** receive information, the information is passed onto the data processing system **34**. The data processing system **34** may include processors and other electronic components that process the images taken by the imaging unit **33** and data received by the RFID reader **31**. The processed information is then sent to the data mapping system **36**. For example, the processed information may include relative physical locations among the RFID modules **12**, absolute positions of the RFID modules **12** relative to a reference point (e.g., the tool **14**), geographical positions of the RFID modules **12** (e.g., GPS positions), or any combination thereof.

The data mapping system **36** receives the processed image and RFID module **12** data and then advantageously maps the location of the RFID modules **12** onto still image(s) or video. In other words, the relative physical locations of the RFID modules **12** are used to identify locations of the RFID modules **12** on the image. In addition to mapping the location of the RFID modules onto images, the data mapping system **36** associates information in the database **38** with specific RFID modules **12**.

In the illustrated embodiment, the data mapping system **36** include an augmented reality system **37** configured to overlay various information onto a real-time image (e.g., video) of the Christmas tree **16**. For example, as discussed in further detail below, the asset management tool **14** may output a real-time image (e.g., video) of the Christmas tree **16** via the display **40**, and include icons, text, or other indicia representing each RFID module **12** (and thus each component) directly on the real-time image. In this way, an operator may view the real-time image of the Christmas tree **16**, and immediately obtain information about each RFID module **12**. For example, an operator may interact with the user input **42** (e.g., a touch screen) to select an icon representing a particular RFID module **12**, thereby activating a pop-up window (or other graphical interface) to access details stored in the RFID module **12** and/or the database **38**.

The database **38** may store a variety of information either transmitted from the RFID modules **12** or previously entered. For example, the database **38** may include location data **44**, component data **46**, and frequency data **48**. The location data

44 may include relative physical locations among the RFID modules 12, absolute locations of the RFID modules 12 relative to a reference point (e.g., tool 14, reference node, etc.), geographical locations (e.g., GPS locations) of the RFID modules 12 and/or the tool 14, or any combination thereof. Furthermore, the location data 44 may be any type of location information useful in mapping the RFID modules 12 to the image. Subcategories of the component data 46 may include identification data 50, history 52, and specifications 54. In particular, the identification data 50 may include unique identifiers, such as model and serial numbers. The history data 52 may include historical information, such as maintenance history, performance history, installation dates, and previously broken components, among others. The specifications data 54 may include specifications for possibly different types of RFID modules 12, the active RFID units 28, the passives RFID unit 30, flow control components 18-26, or other kinds of components that the RFID modules 12 mark for the asset management tool 14.

As illustrated in FIG. 1, the data mapping system 36 sends information to the display 40. The display 40 accordingly may display the position of the RFID modules 12 on an image captured by the imaging unit 33, and display information stored on the RFID modules 12 in a table, chart, or other presentation correlated to the image. This enables an operator to quickly identify an asset's position (i.e., a valve, fitting, etc.) as well as view important information about the asset (e.g., history 52, specifications 54). Finally, the user input 42 enables an operator to update, change, and retrieve information in the database 38. While FIG. 1 illustrates that the asset management tool 14 may advantageously include all of the systems 32-36, database 38, display 40, and user input 42 within a single physical tool, in other embodiments the tool 14 may be separated into two or more separate tools. For example, in the case of a subsea well, the data acquisition system 32 may be located on an underwater remotely operated vehicle (ROV) that communicates information to a data processing system 34 located at the sea surface either through a hard wire communication connection or other type of wired or wireless telemetry system.

FIG. 2 is a block diagram of an embodiment of a radio frequency identification (RFID) module 12. The RFID module 12 includes an active RFID unit 28 and a passive RFID unit 30. The active RFID unit 28 may include an antenna 60, a battery 62, a global positioning system (GPS) 64, a microchip 66, and a memory 68. During use, the antenna 60 may receive and transmit signals. For example, the antenna 60 may permit communication with the asset management tool 14, other RFID modules 12, and GPS satellites. The battery 62 enables the active RFID unit 28 to transmit communications over distances that a passive RFID unit 30 cannot. This allows the asset management tool 14 and in particular the data acquisition unit 32 to communicate with active RFID units 28 at a distance (e.g., 1 to 300 meters, 1-200 meters, 1-100 meters). In some embodiments, the active RFID unit 28 may include GPS capabilities 64. The GPS 64 enables the active RFID unit 28 to determine its location, which may then be transmitted to the asset management tool 14 or to other RFID modules 12 that then use the information to determine their respective positions.

The microchip 66 processes incoming and outgoing communications and may communicate with the memory 68. The microchip 68 may be an application specific microchip specifically designed for RFID applications or a general-purpose microchip. In some embodiments, the microchip 66 may include a memory within the chip 66, rather than communicate with an external memory 68.

The memory 68 may store information for transmission to the asset management tool 14 or possibly other RFID modules 12. For example, the memory 68 may include location data 70, component data 72, frequency data 74, and power control data 76. In particular, the location data 70 may be preprogrammed allowing the unit 28 to automatically transmit its location to the asset management tool 14, thus eliminating repeated determination of its position. The component data 72 may include identification data 78, history 80, and specifications 82. As seen above, the asset management tool 14 may store the same information in database 38. Accordingly, the information may be safeguarded through storage in both the database 38 of the asset management tool 14 and in the memory 68 of the active RFID unit 28. The memory 68 may also include frequency data 74 (i.e., the frequencies that permit communication with and transmission from the active RFID unit 38). For example, the frequency data 74 may include a first frequency for communication with the tool 14, a second frequency to communicate with other RFID modules 12, and so forth. Finally, the memory 68 may include power control data 76. The power control data 76 may be used by the microchip 66 to prevent overconsumption of the battery 62. For example, the power control data 76 may include power saving information to reduce power consumption by shutting down unnecessary functions while not in use.

Similar to the active RFID unit 28, the passive RFID unit 30 includes an antenna 84, microchip 86, and memory 88. The antenna 84 permits reception and transmission of communications. The microchip 86 processes the incoming and outgoing communications. The memory 88 may include location data 90, component data 92, and frequency data 94. Component data 92 may include identification data 96, history data 98, and specification data 100. This information is similar to that discussed with respect to the active RFID unit memory 68 and may provide a safeguard for the storage of information. In some embodiments, the passive RFID unit 30 and the active RFID unit 28 may be connected with a communication line 102. In certain embodiments, the active and passive RFID units 28 and 30 may share one or more features, such as the microchip and/or memory.

FIG. 3 is a flow chart of an embodiment of a process 120 for managing assets of a mineral extraction system using the systems of FIGS. 1 and 2. The process 120 begins by transmitting a first communication from the RFID reader 31 to RFID module(s) 12 disposed on mineral extraction component(s). This first communication may wakeup RFID modules 12 or may be a request for information stored by the RFID module 12. The process 120 continues with a transmission of a second communication (e.g., component data and location data) from RFID module(s) 12 to the RFID reader 31. The RFID reader 31 receives the second communication and passes this information onto the data processing system 34 and data mapping system 36. These systems 34 and 36 then perform the third step 126 of processing the component data and location data acquired by the RFID reader 31. After processing the data, the process 120 transitions into the fourth step 128 of storing component data and location data of the RFID module(s) 12. For example, the data may be stored in the database 38. In the fifth step 130, a display 40 displays an image having location(s) of the RFID module(s) 12 mapped relative to the mineral extraction component(s). By mapping the RFID module(s) 12 relative to the mineral extraction component(s), an operator is able to determine the real world position of the mineral extraction component(s) by looking at an image. Accordingly, an operator may rapidly locate which mineral extraction component needs maintenance, replacement, visual inspection, or another service. After displaying

the image, the process **120** moves to the sixth step **132** wherein the RFID reader **31** transmits a third communication (e.g., update/new data) to the RFID module(s) **12**. In other words the RFID reader **31** may update the memories **68** and **88** of the RFID module **12** with additional information (i.e., service date, components changed out, etc.) or the third communication may perform another kind function (i.e., turn off RFID modules **12**, change frequency, among other functions).

FIG. **4** is a flow chart of an embodiment of a process **150** for communicating with active RFID module(s) **12** using the systems of FIGS. **1** and **2**. The process **150** begins with step one **152** by transmitting a first communication from the RFID reader **31** to active RFID unit(s) **28** disposed on mineral extraction component(s). In the second step **154**, the active RFID unit(s) **28** wake in response to the first communication from the RFID reader **31**. In order words, the active units **28** turn-on enabling the transmission and reception of information. In the third step **156**, the active RFID unit(s) **28** transmit a second communication (e.g., component data and location data) from active RFID unit(s) **28** to the RFID reader **31**. After receiving the second communication **156**, the RFID reader **31** performs step four **158** wherein it transmits a third communication (e.g., update/new data) to the active RFID unit(s) **28**. As explained previously, the updates and new data may include information such as service dates, components changed, components serviced, among others. The final step **160** in process **150** involves transmitting a fourth communication from the RFID reader **31** to active RFID unit(s) **28** to shut down active RFID unit(s) **28**.

FIG. **5** is a flow chart of an embodiment of a process **170** for communicating with active RFID units **28** at different frequencies using the systems of FIGS. **1** and **2**. In the first step **172**, the process **170** begins by waking active RFID units **28** with a communication at a first frequency. In step two **174**, the active RFID units **28** communicate with each other at a second frequency. For example, the active RFID units **28** may communicate with one another in order to determine their locations or to exchange some other kind of information. The third step **176** involves the RFID reader **31** communicating with the active RFID units **28** at a third frequency. In the final step **178**, the active RFID units **28** are shutdown at a fourth frequency. For example, the RFID reader may transmit a communication at a fourth frequency that signals the units **28** to turn-off.

FIG. **6** is a flowchart of an embodiment of a process **200** for communicating with each RFID module **12** individually using the systems of FIGS. **1** and **2**. The process **200** begins with step one **202** by waking an active RFID unit (N) with communication at frequency (I). As illustrated in block **204**, all values are initially set to one. In other words, the process **200** begins by waking a first unit N at a first frequency I. In the second step **206**, the RFID reader **31** communicates with the active RFID unit N at a frequency J. While communicating on frequency J, the reader **31** and active RFID unit N may pass information (e.g., location data, identification data, among others). In the third step **208**, the active RFID unit N is shutdown with a communication at frequency K. After shutting down active RFID unit N, the process **200** enters a decision point **210**. The decision point **210** enables the system to determine whether there are additional RFID units to communicate with. If there are no additional RFID units to be communicated with, the process ends at block **212**. If there are additional units, then the process **200** changes the frequencies and the active RFID unit, as illustrated in block **214**. Once the values for I, J, K, and N change, then the process **200** repeats steps **202**, **206**, **208**, and **210** until there are no more units to communicate with. Thus, in the process **200**, each RFID unit has one or more unique communication frequencies, which are different than the other RFID units. In this manner, the different frequencies may enable individual communications with specific RFID units without waking or interfering with all other RFID units.

FIG. **7** is a flow chart of an embodiment of a process **230** for mapping the location of an RFID module **12** onto an image using the systems of FIGS. **1** and **2**. The process **230** begins by acquiring an image (e.g., still image or video image of a mineral extraction system) as indicated by block **232**. After acquiring the image **232**, the process **230** acquires data (e.g., unique identification and/or location data) from a plurality of RFID modules **12** disposed on components of the mineral extraction system as indicated by block **234**. With the image and data, the process **230** proceeds to step three **236**, which maps the location of each RFID module **12** on the image of the mineral extraction system. In step four **238**, the process **230** stores the map data correlating map locations of RFID modules **12** with the image. In some embodiments, the mapped location of the RFID module on the image may not correctly correspond with its actual position on the mineral extraction system. In these situations, the process **230** may include an additional step five **240** wherein the operator manually updates each RFID module with the correct map location. However, in certain embodiments, the correct map location may be automatically acquired from memory and/or a GPS of each RFID module.

FIG. **8** is a block diagram of an embodiment of a system **258** with blind RFID modules (nodes) **260** and reference RFID modules (nodes) **262** communicating with each other. As illustrated, the modules **260** and **262** are able to transmit and receive signals **264**. The signals **264** enable the blind modules **260** to determine their location by sending to and receiving signals from the reference modules **262**. In other words, the blind modules **260** do not know their positions, but the reference modules **262** know their positions (e.g., preprogrammed with location information or may include GPS functionality). Accordingly, when the blind modules **260** send to and receive signals from the reference modules **262**, the blind nodes **260** may determine their position (e.g., by triangulation). In some embodiments, the RFID reader **268** may include GPS functionality and accordingly function as a reference module that assists the blind modules **260** in determining their location.

FIG. **9** is a block diagram of a system **278** with RFID modules **280**, each of which knows its position (i.e., reference modules). Accordingly, the modules **280** may all communicate their position to the reader **282** without any need for triangulation with other modules **280**. The modules **280** may know their position through preprogramming or GPS functionality.

FIG. **10** is a flow chart of an embodiment of a process **300** using augmented reality to manage assets, such as mineral extraction equipment. Step one **302** of process **300** involves acquiring an image (e.g., still image or video image) of a mineral extraction system. In step two **304**, the process **300** acquires data (e.g., component data) from a plurality of RFID modules **12** disposed on components of the mineral extraction system. The image and acquired data is then used in step three **306** to display an image with each RFID module **12** mapped on the image. In other words, each RFID module **12** mapped on the image is associated with a specific piece of equipment in the mineral extraction system. Step four **308** then enables user selection of each RFID module (e.g., user selectable icon) on the image to access data about the specific piece of equipment in the mineral extraction system associ-

ated with the RFID module **12**. For example, a different portion of the image may change colors or become active as an operator moves a cursor across the image on a display, thereby enabling the operator to select that portion of the image associated with a particular RFID module. In an augmented reality process **300**, the operator may change their location at decision point **310** with the process **300** automatically repeating steps **302**, **304**, and **306**. In other words, process **300** allows an operator to continuously change their position during which the image automatically adjusts and the RFID modules are remapped on the image. This enables an operator to recognize the position of equipment in the mineral extraction system regardless of their position relative to the system. Furthermore, the process **300** enables an operator to select the icon (or other operator selectable indicia) associated with the piece of equipment while viewing the image, to either update or access data about that specific piece of equipment.

FIG. **11** is a schematic of an embodiment of an asset management tool **320** utilizing augmented reality. In other words, the tool **320** may be described as an augmented reality asset management tool or system. The tool **320** includes a frame **322**, display **324**, camera **326**, antenna **328**, GPS **330**, memory **332**, and processor **334**. As illustrated, the frame **322** surrounds the display **324**. In certain embodiments, the display **324** may be a touch screen, thus enabling a user to interact with the display **324**. The camera **326** may be a still camera and/or a video camera enabling the operator to captures images **335** of mineral extraction systems for display on the display **324**. As seen in FIG. **11**, the display currently shows an image **335** (e.g., a real-time image) of a mineral extraction system **336** (e.g., a Christmas tree). The mineral extraction system **336** includes valves **338** and RFID modules represented by icons **340**.

As explained above, the RFID modules **340** may transmit data including identification and location data. The antenna **328** receives this data and passes it on to the processor **334**. The processor **334** may then take this information and map it onto the images **335** taken by the camera **326**. In this manner, the tool **320** correlates the images **335** with the data received from the RFID modules **340**, thus enabling an operator to identify specific components (e.g., valves **338**) of the mineral extraction system **336** in the image **335**. During use, the operator may operate a user input device to move a cursor **342** over the icons **340** (e.g., overlaid information). The processor **334** may then automatically cause a popup window **344** (e.g., overlaid information) to appear when the cursor passes over an icon **340**. The popup window **344** may show information (e.g., type of valve, installation date, service dates and types, problems experienced, etc.) retrieved from the memory **332** or from the RFID module associated with that piece of equipment. In other embodiments, the processor **334** may wait for the user to select the specific icon before displaying the popup window.

In the illustrated embodiment, the tool **320** uses augmented reality, and thus may enable the operator to view the image **335** and overlaid information (e.g., icons **340** and windows **344**) in real-time. Accordingly, as the operator moves the tool **320** to change the point of view of the camera **326**, the image **335** changes in real-time to depict the current point of view of the operator, and simultaneously updates the mapping of the RFID modules **340** and associated overlaid information (e.g., icons **340** and windows **344**) in real-time. In this manner, the operator can experience the real world having the mineral extraction system **336** along with the overlaid information in real-time, thereby enabling the operator to quickly obtain information about the system **336**. As discussed above, the asset management tool **320** may be separated into two or more separate tools. For example, in the case of a subsea well, the data acquisition system **332** may be located on an underwater remotely operated vehicle (ROV) that communicates information to a data processing system **334** located at the sea surface either through a hard wire communication connection or other type of wired or wireless telemetry system. The ROV may be equipped with appropriate imaging equipment to provide the images for the augmented reality capabilities.

FIG. **12** is a schematic of an embodiment illustrating the asset management tool **320** using augmented reality. In particular, FIG. **12** is the same as FIG. **11** except that the image **335** has changed its point of view slightly (i.e., rotated 90 degrees). As illustrated, the tool **320** continues to show the mineral extraction system **336** with the RFID modules **340** and valves **338**. Indeed, as the operator moves around the mineral extraction system **336**, the GPS **330** tracks the position of tool **320** while the camera **326** sends updated images **335** to the processor **334**. Simultaneously, the antenna **328** receives location and identification data from the RFID modules **340**. The processor **334** processes and combines the changing image data with the identification and location data and updates the image **335** on the display **324**. In this manner, the tool **320** provides the operator an understanding of where equipment is located and the necessary information to manage the equipment.

While the invention may be susceptible to various modifications and alternative forms, specific embodiments have been shown by way of example in the drawings and have been described in detail herein. However, it should be understood that the invention is not intended to be limited to the particular forms disclosed. Rather, the invention is to cover all modifications, equivalents, and alternatives falling within the spirit and scope of the invention as defined by the following appended claims.

The invention claimed is:

**1**. A system, comprising:

a mineral extraction system comprising a component; and

a radio frequency identification (RFID) module coupled to the component, wherein the RFID module comprises component data relating to the component and location data relating to a location of the component relative to the mineral extraction system, and wherein the RFID module comprises an active RFID unit and a passive RFID unit; and

an asset management system comprising an asset management tool configured to map the location of the component on a real-time image of the mineral extraction system.

**2**. The system of claim **1**, wherein the asset management tool comprises an augmented reality system configured to map the location of the RFID module on the image of the mineral extraction system in real-time, and augmented reality system is configured to overlay information relating to the RFID module on the image of the mineral extraction system in real-time.

**3**. The system of claim **1**, comprising the mineral extraction system comprising the component and another component, wherein another RFID module is coupled to the other component, the other RFID module comprises other component data relating to the other component and other location data relating to a location of the other component relative to the coordinate system.

4. The system of claim 3, wherein the RFID module comprises a reference node comprising the location data originating at the RFID module, and the other RFID module comprises a blind node comprising the other location data determined with reference to the reference node.

5. The system of claim 3, wherein the RFID module comprises a reference node comprising the location data originating at the RFID module, and the other RFID module comprises another reference node comprising the other location data originating at the other RFID module.

6. The system of claim 1, wherein the passive RFID unit is directly coupled to the active RFID unit.

7. The system of claim 1, wherein the RFID module comprises an active RFID unit having a battery and a power control feature, wherein the power control feature is configured to conserve energy in the battery.

8. The system of claim 7, wherein the power control feature comprises a wakeup feature and a shutdown feature, and the wakeup feature is configured to power up the active RFID unit in response to a communication.

9. The system of claim 8, wherein:

the shutdown feature is configured to power down the active RFID unit in response to another communication;

the communication comprises a communication frequency; and

the other communication comprises a another communication frequency different from the communication frequency.

10. The system of claim 7, wherein the power control feature is responsive to a communication frequency, and the RFID module is configured to communicate with a RFID reader and/or a plurality of different RFID modules at another communication frequency different from the communication frequency.

11. The system of claim 1, wherein the RFID module comprises a global positioning system (GPS) feature configured to generate the location data relating to the location of the component.

12. A system, comprising:

an asset management tool, comprising:

a data acquisition system configured to acquire component data and location data from a plurality of radio frequency identification (RFID) modules disposed on components of a mineral extraction system, wherein each of the RFID modules comprises an active RFID unit and a passive RFID unit; and

a data mapping system configured to map locations of the plurality of RFID modules on a real-time image of the mineral extraction system, wherein the data mapping system comprises an augmented reality system configured to map locations of the plurality of RFID modules on the real-time image of the mineral extraction system in real-time.

13. The system of claim 12, wherein the data acquisition system comprises at least one RFID reader configured to simultaneously communicate with the plurality of RFID modules to acquire the component data and the location data.

14. The system of claim 12, wherein the data mapping system and/or at least one of the RFID modules comprises a global positioning system (GPS).

15. A system, comprising:

one or more radio frequency identification (RFID) modules, each comprising:

an active RFID unit;

a passive RFID unit; and

a memory comprising component data and location data relating to a component of a mineral extraction system;

an asset management tool having a data acquisition system and an augmented reality data mapping system, wherein the data acquisition system is configured to acquire the component data and the location data from the one or more RFID modules disposed on components of the mineral extraction system, and the data mapping system is configured to map locations of the plurality of RFID modules on a real-time image of the mineral extraction system.

* * * * *